INSTALLATION MANUAL:

COR-1410202

JEEP GLADIATOR 1" REAR BUMP STOPS (2020+, JT)

INCLUDED ITEMS

1410202 Jeep Gladiator 1" Rear Bump Stops – (2020+, JT)			
QTY	Part Number	Description	Class/Grade
2	1410202	Jeep Gladiator 1" Rear Bump Stop Perch	N/A
4	11587998	5/16"-18 x 1" Hex Drive Zinc Finish Alloy Steel Socket Cap	Grade 8
4	37184	5/16"-18 Yellow Zinc Finish Steel Nylon Insert Lock Nut	Grade 8

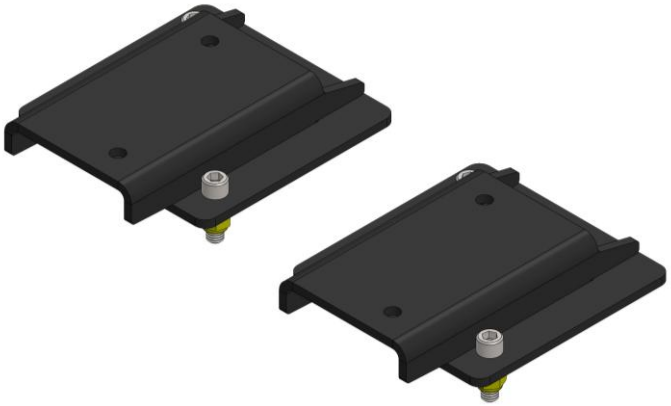

Product Notes and Features:

The Jeep Rear Bump Stops for Gladiator JT 2020+ are designed to limit suspension compression. Using these extensions prevents damage to your suspension components when tackling rugged terrain, specifically during a "bottom-out" driving condition.

- For use in the rear bump stop location of the JT Gladiator
- Designed to meet the demands of rugged terrain and daily driving
- Included Grade 8 hardware with a corrosion-resistant coating
- Designed to work with our adjustable, stackable spacer kit (COR-1410201) for even more up travel tuning
- Mounts outside of the coil on the OEM spring pad, no spring removal required

DISCLAIMER

WARNING:

Suspension systems and their components are designed to enhance your vehicle's off-road performance. This may cause your vehicle to handle differently, on and off-road. Always wear your seatbelt and take extra care when driving a modified vehicle. Failure to do so can result in loss of control which may result in a rollover causing serious injury, or even death to the driver and/or passengers of the vehicle. Regular maintenance and consistent inspections are required to keep your modified vehicle safe and functioning properly. These suspension systems and any components should be installed by certified technicians only. Attempts to install these products without proper knowledge can lead to poor performance, or possible failure, which may jeopardize the safety of the vehicle and its passengers. The installer is responsible for proper installation ensuring a safe and properly functioning vehicle. Take extra care when operating a modified vehicle and thoroughly inspect your vehicle before and after every off-road use.

Read the instruction set in its entirety before attempting the installation.

NOTE:

This product may require general welding, fabrication, and automotive mechanic skills. Welding should only be done by a competent welder. Clayton Off Road implies no guarantees or warranties and is not liable for improper installation. Some grinding and fitment may be required when installing this product. Every vehicle varies slightly, and some fabrication and/or modification may be required.

ATTENTION:

It is the customer's responsibility to thoroughly inspect all received parts to ensure they are assembled correctly and fully welded. Please carefully examine all weld seams and verify that bolt-through holes are properly aligned. Some Clayton Off Road products are permanent, non-removable, weld-on solutions. **If a defect or issue is found after installation, especially with permanent weld-on components, it may be difficult or impossible to correct.** Inspecting the part(s) received beforehand helps prevent unnecessary and avoidable complications.

All Clayton Off Road products are engineered and tested on U.S. spec, left-hand drive vehicles. Compatibility with right-hand drive vehicles is not guaranteed. Customer verification is highly recommended to ensure proper fitment prior to purchase.

ATTENTION: TORQUE SPECIFICATION

When working on any vehicle, it is good practice to torque suspension/weight-bearing components while the vehicle is resting under its load. This instruction set, as well as any other Clayton Off Road instruction set, assumes the installer will tighten any suspension-related components properly, to the recommended torque specification, when the vehicle is resting safely under its own weight.

INSTALLATION INSTRUCTIONS

TOOLS REQUIRED FOR INSTALLATION

- *Basic hand tools*
- *Standard sockets* *½"*
- *Allen keys* *¼"*

*****Take this product to a licensed professional if you are hesitant about the installation process!*****

1. Remove any existing rear bump stop at the axle that may already be installed, and align the new bump stop bracket with the holes on the axle mount. Drop the supplied bolts through the openings on the mounting face. Repeat this step on the opposite side. Use two hex head bolts per bump stop.

Figure 1: Bracket located on axle mount with bolts dropped in holes

INSTALLATION INSTRUCTIONS

2. Using the supplied nylon nuts, a ½" socket, and a ¼" hex key, tighten the two mounting bolts down. Complete this step on both sides and on the opposite side of the axle. Torque to 30 ft-lbs.

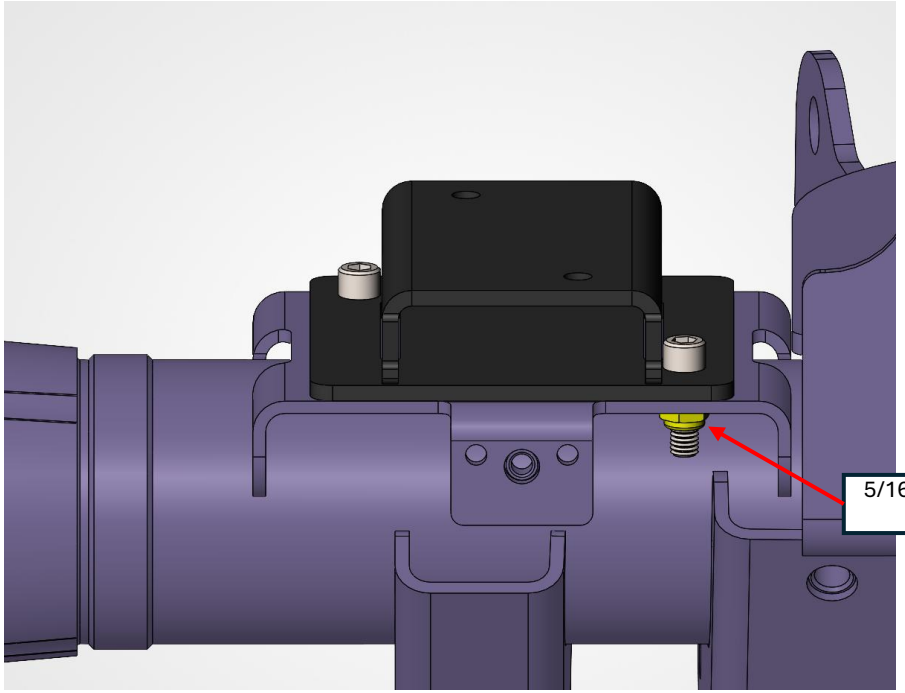

Figure 2: Front nylon nut tightened down to 30 ft-lbs

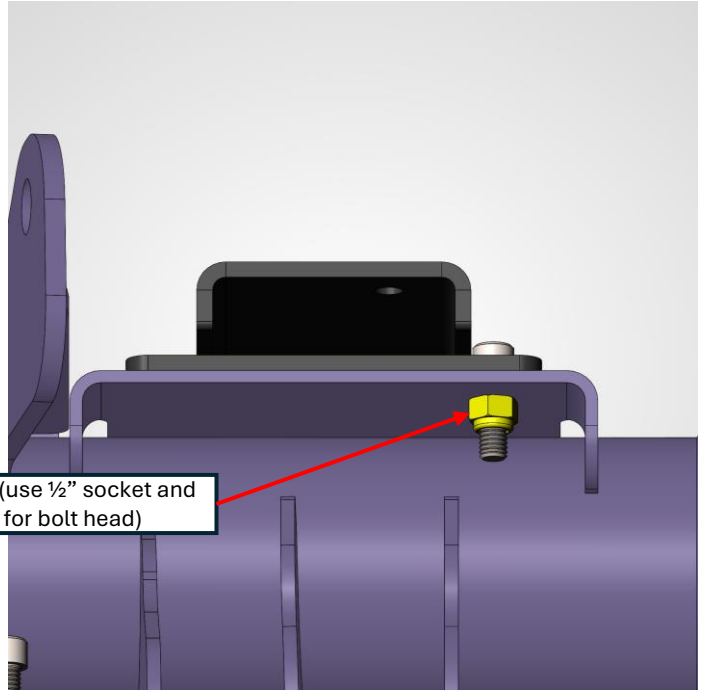

Figure 3: Rear nylon nut tightened down to 30 ft-lbs

INSTALLATION INSTRUCTIONS

3. The installation is complete. Please note that if you require more bump stop, COR-1410201 is directly compatible with this product. Simply bolt on the required number of spacers using the supplied hardware.

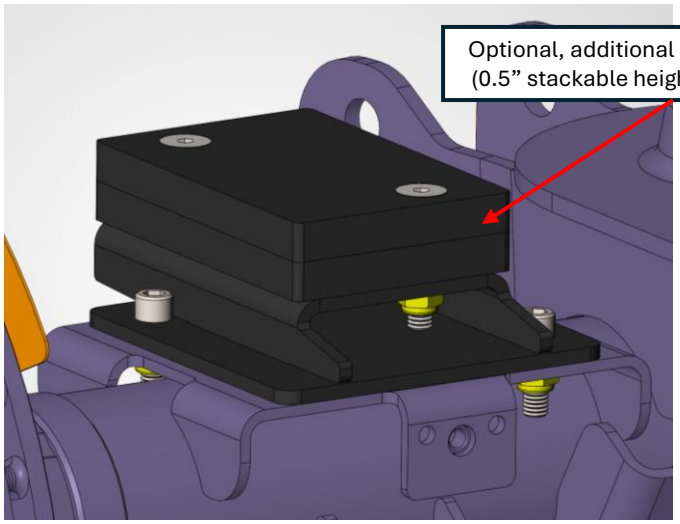

POST-INSTALLATION CHECKLIST:

- ❑ Hardware torqued to 30 ft-lbs
- ❑ Required amount of bump stop is achieved, and suspension up-travel is properly limited

CLAYTON OFF ROAD