Clayton Off Road
COR-1106100
JEEP GRAND CHEROKEE COIL MOUNT REPAIR KIT (1999-2004 WJ)

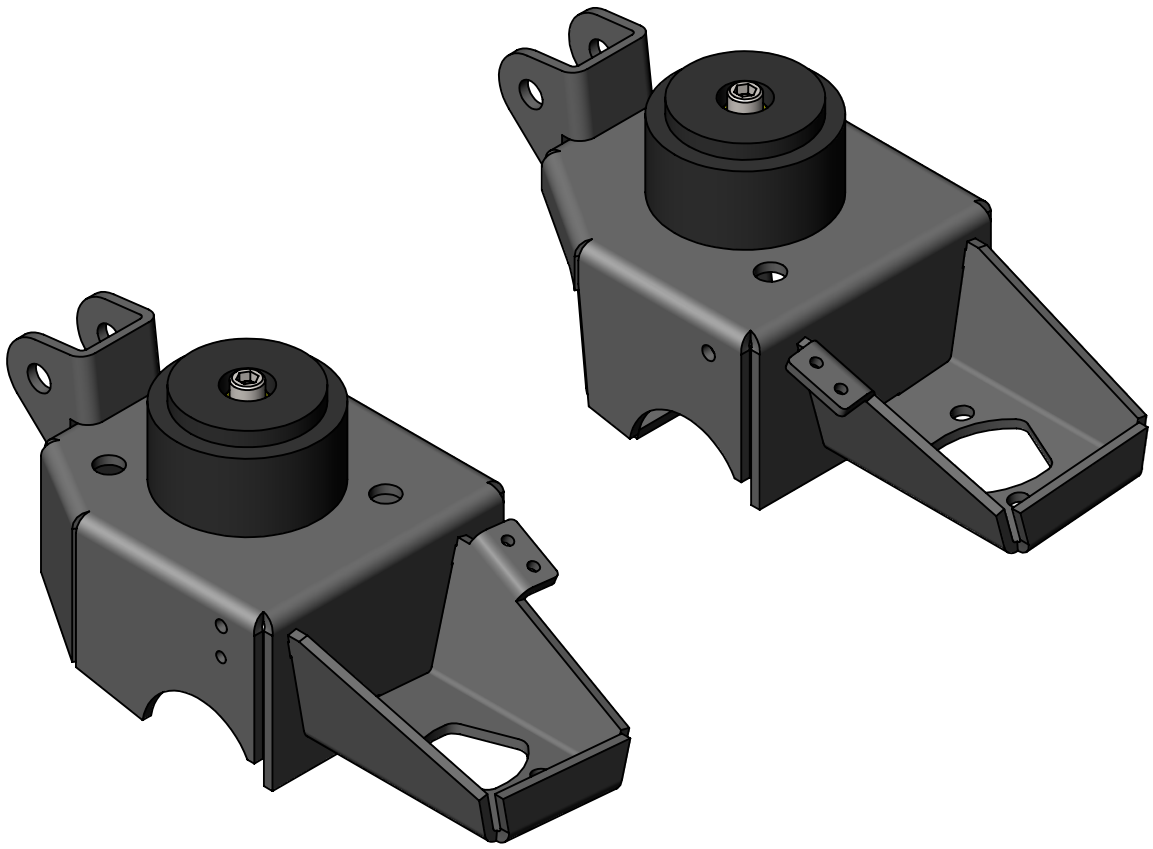

NOTES: This product requires general welding, fabrication and automotive mechanic skills. Welding should only be done by a competent welder. Clayton Off Road implies no guarantees or warranties and is not liable for improper installation. Some grinding and fitment may be required when installing this product. Every vehicle varies slightly and some fabrication may be required.
For more information please visit our web site.

Refer to picture below.

Step 1: Remove axle from vehicle.
Step 2: Remove factory spring perches, sway bar mounts and track bar mount.
Step 3: Grind axle tubes smooth and clean axle tubes for welding.

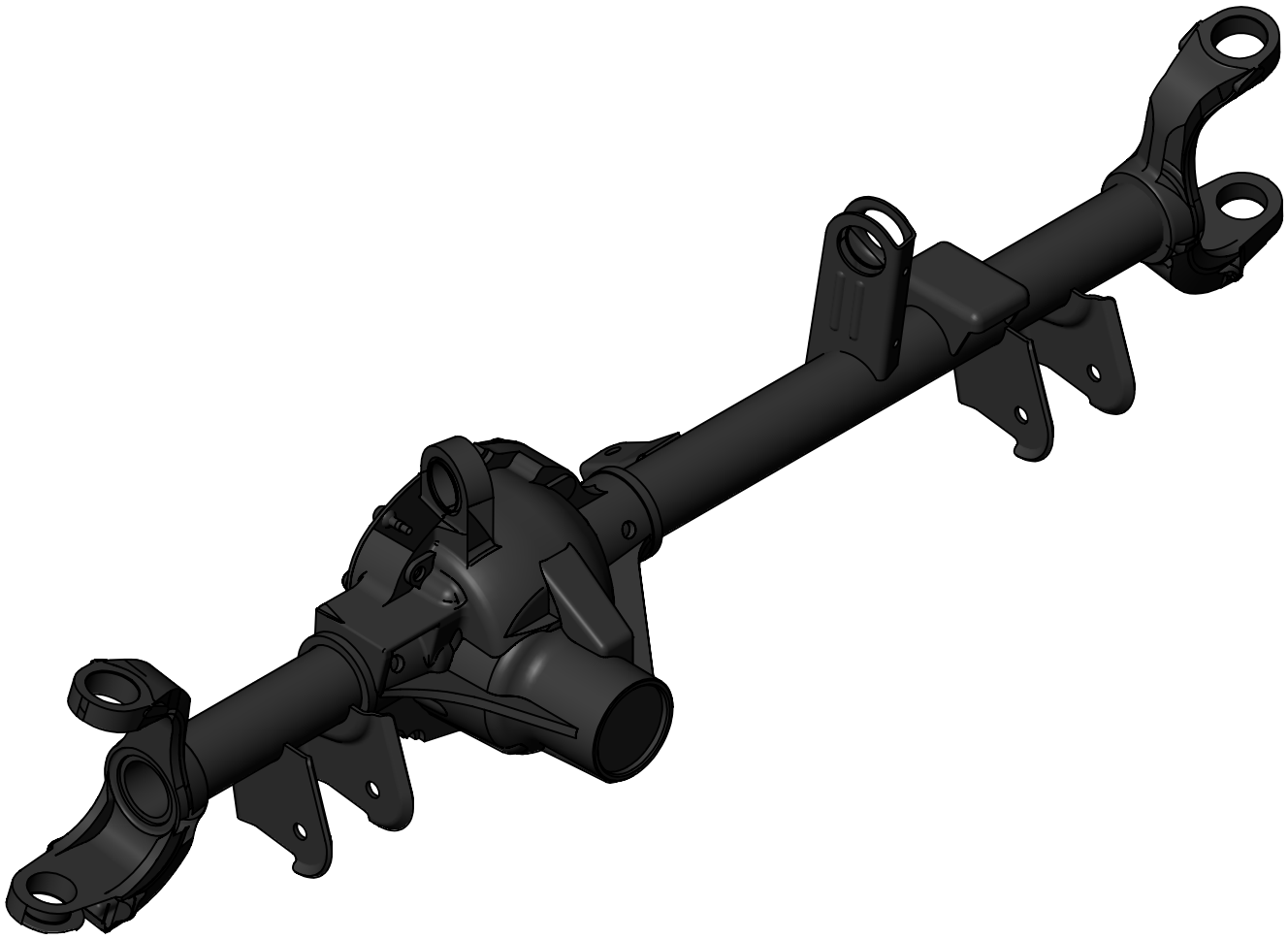

Refer to picture below and 3 drawing views for measurements.

Step 1: Position new spring perches on axle.
Step 2: Tack weld in place.
Step 3: Weld around both sides and cross the back of each spring perch.
Step 4: Weld bottom of track bar mount.
Step 5: Paint axle.
Step 6: Install axle in vehicle.

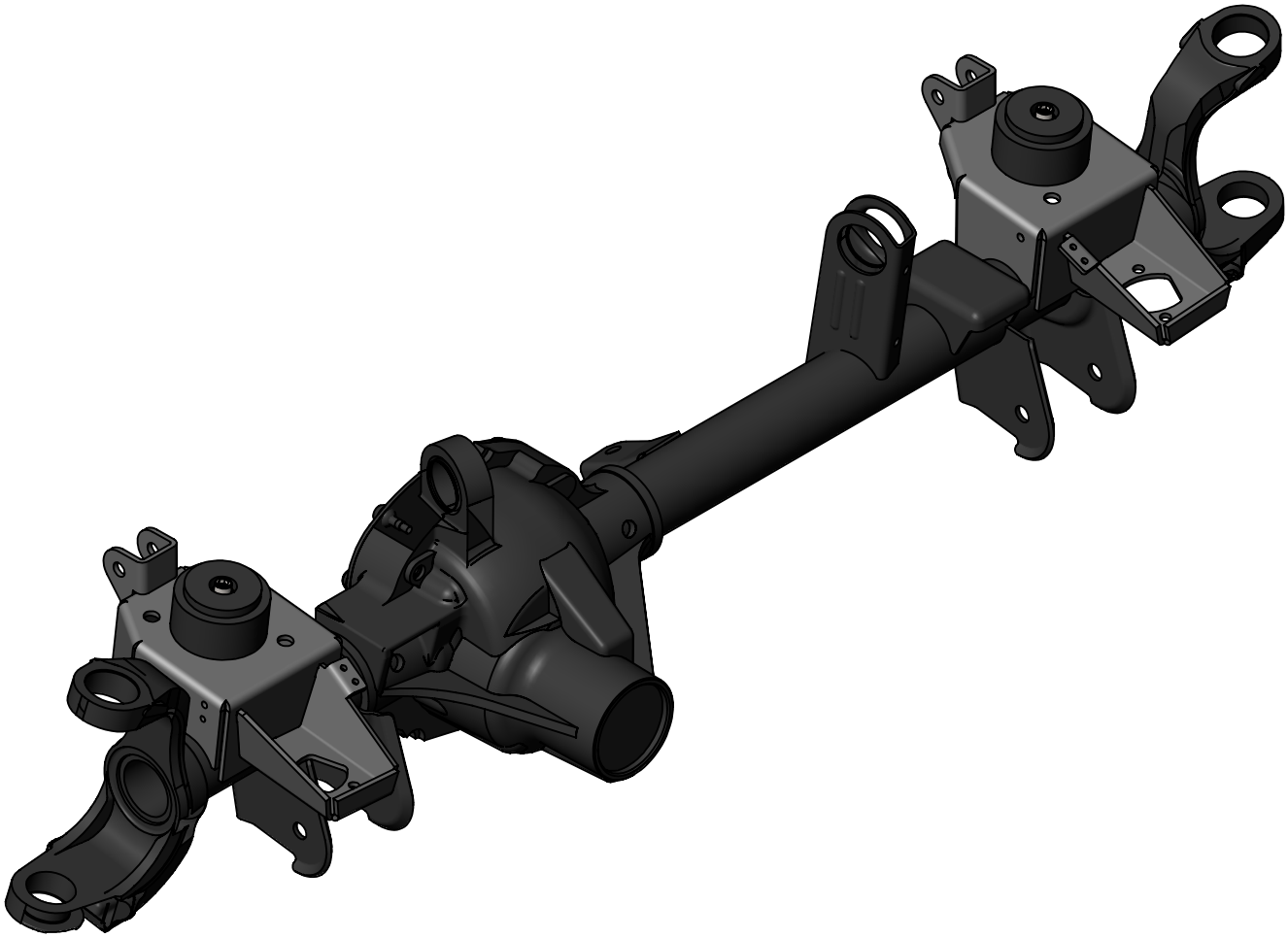

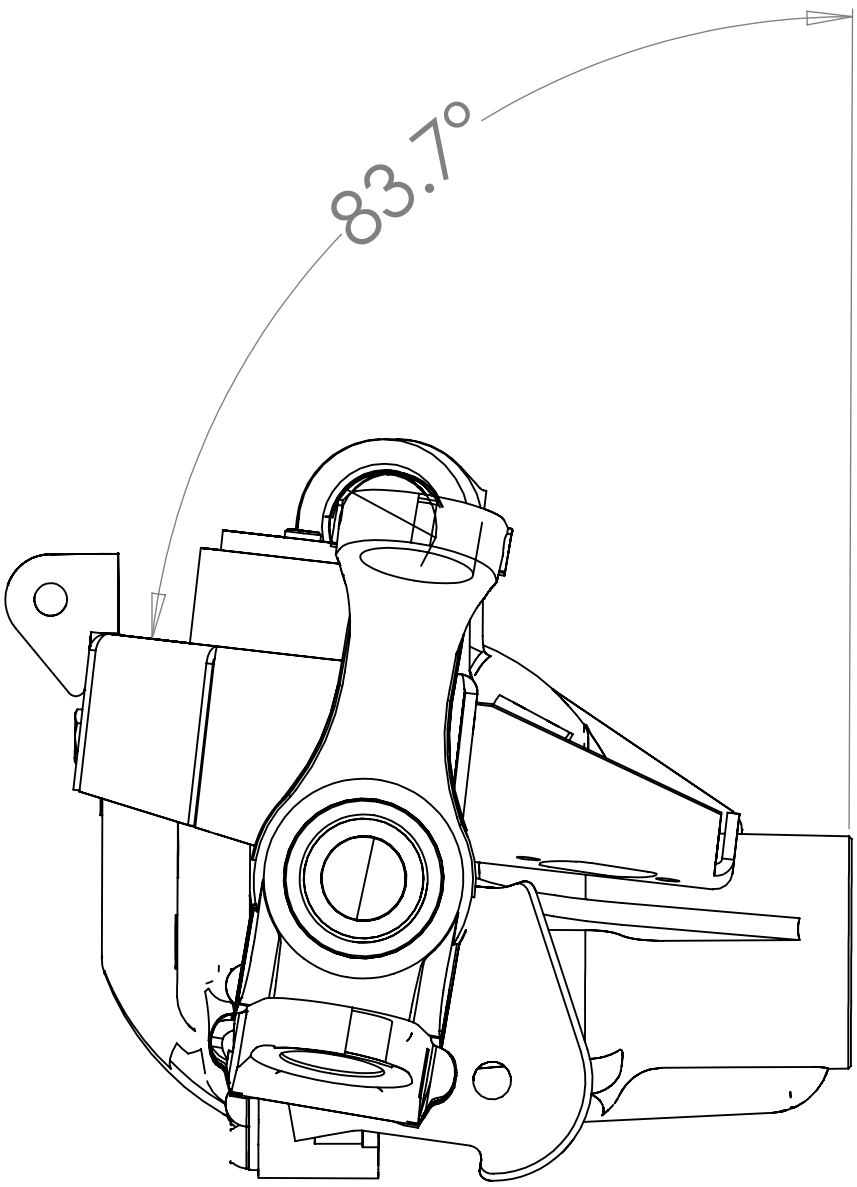
83.7°

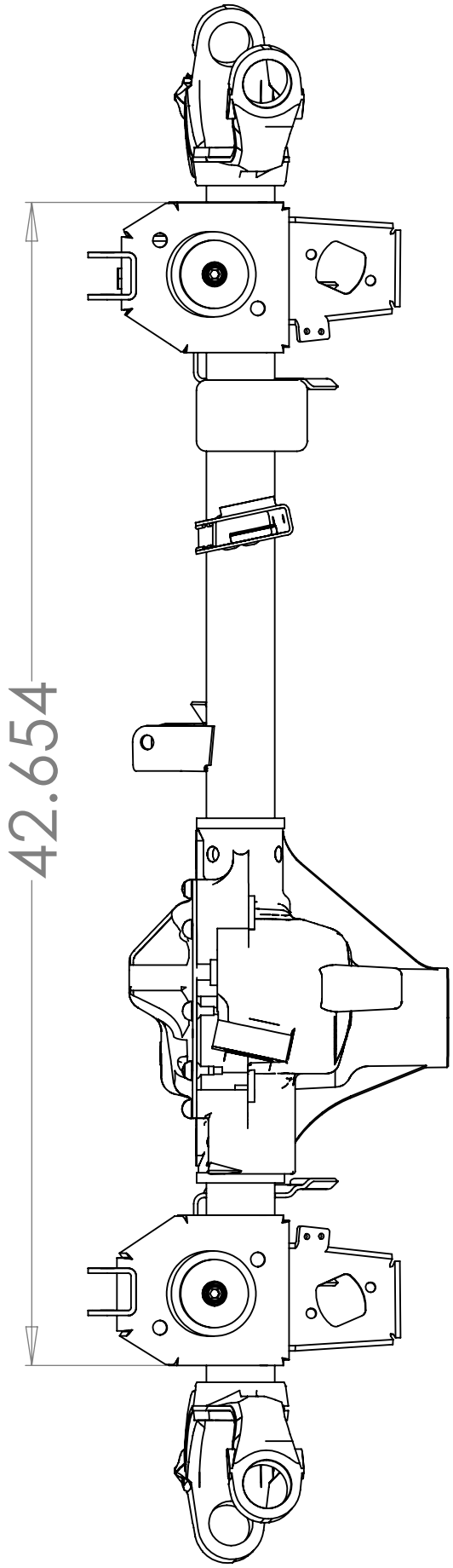
42.654

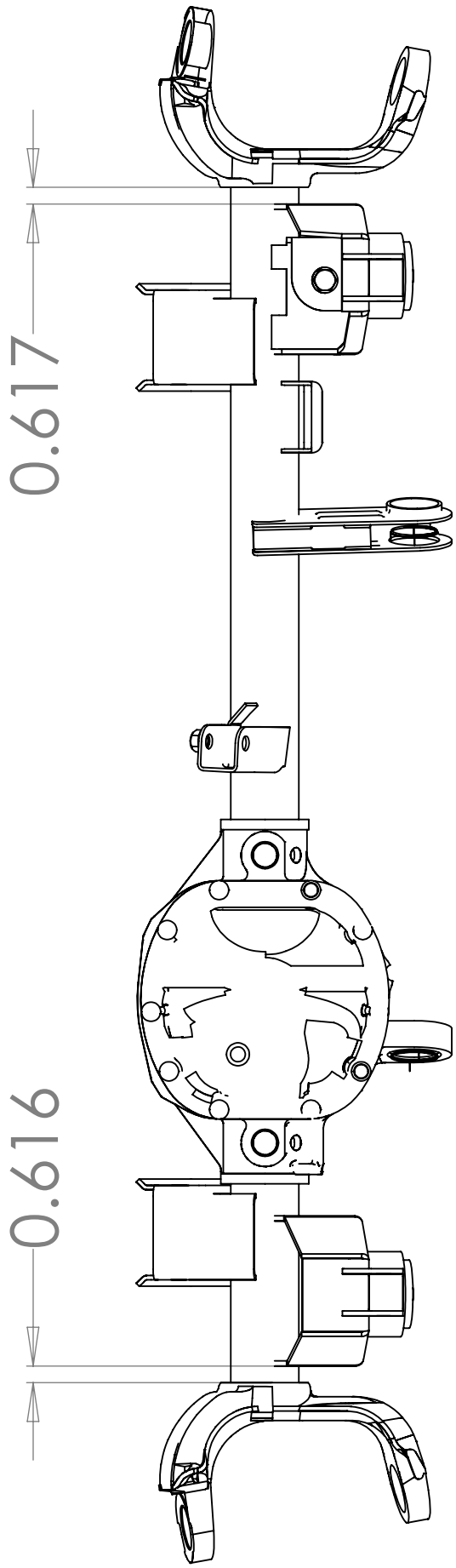
0.617
0.616