Product:

aFe Control Coilovers

Part Numbers:

430-301001-N

Applications:

2015 Ford Mustang GT, Ecoboost

Contents in the box:

Qty	Part #	Description
1	00P-0A1607-N	Front Left Coilover
1	00P-0A1608-N	Front Right Coilover
4	00P-0P2353-A	Center Camber Washers
4	00P-0P2353-A	Offset Camber Washers
2	00P-0A1637-N	Rear Coilovers
4	00P-0C1654-A	M12x30 Bolts
1	00P-0P1493-A	Perch Adjuster Tool

Difficulty of Installation: **Beginner** |----------x----------| **Advanced**

Reason: This installation requires minimal removal of major components other than those being replaced, but does require specialized tools.

Expected Installation Time: 4 Hours

Recommended Tools:

- 18mm box end wrench
- 23mm box end wrench
- 8mm socket
- 10mm socket
- 13mm socket
- 15mm socket
- 18mm socket
- 19mm socket
- 21mm socket
- 21mm deep socket
- 3/8” drive ratchet
- 3/8” drive extensions
- 6mm Allen wrench
- 3/8” drive Torque Wrench
- Spring Compressor
- 2 Post Lift and Screw Jack (preferred)
- Floor jack
- Jack stands
- Pry Bar

This procedure is best performed on a vehicle lift by qualified mechanics. If a lift is not available, use an appropriately sized floor jack and jack stands to support the weight of the vehicle.

Pre-Installation Tips and Best Practices:

- Take pictures throughout the entire install process
- Regular nut and bolt checks are crucial in maintaining safe vehicle operation, especially in racing applications.
- Re-torque end link bolts and sway bar brackets after every racing/track event.
- Mark bolts that have been torqued to spec with a paint pen so fasteners that have been torqued can quickly be identified.
- Thread locking compound is highly recommended on any stressed suspension components.

Front Installation

1. Use a multi-post lift or floor jack to lift the vehicle via the proper jacking points to a comfortable working height.
2. Using a 19mm socket remove the front wheels.
3. Unbolt the sway bar end links from the OEM strut using an 18mm wrench and 8 mm socket.
4. Using a 10mm socket, remove the clip holding the brake lines to the body.
5. Using a 23mm wrench, and a 21mm socket and impact wrench remove the 2 bolts holding the strut housing to the spindle upright. Make sure you use a floor or screw jack to hold the spindle in place while removing the strut.

Note: On models not equipped with the performance brake upgrade, it may be necessary to remove the brake caliper from the spindle in order to access the spindle nuts. Do not remove the brake lines, you can use a strap or safety wire to hold the caliper in place.

6. Using a 15mm socket, remove the 3 bolts holding the upper strut mount into the vehicle. Remove the strut from the vehicle.

7. Using a proper spring compressor, remove the strut center bolt with a 21mm deep socket.
8. Install the upper strut mount onto the coilover and torque the center nut to 40 lb-ft. Re-use the stock nut.
9. Install the coilover into the vehicle and torque the 3 upper mount bolts to 28 lb-ft.

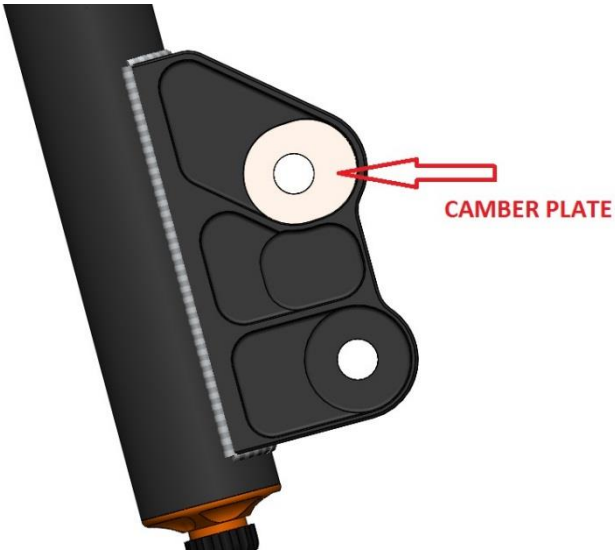

10. Select the correct Camber Plate for the upper bolt and install it in the strut.

It is recommended to start with the plate with the centered hole. The offset plate can be installed for either more or less camber during alignment. This can also be used to gain tire clearance.

11. Using a 23mm wrench, and a 21mm socket and an impact wrench re-attach the 2 bolts holding the strut housing to the spindle upright. If brake calipers were removed during the installation, re-attach now.
12. Using a 10mm socket, re-attach the clip holding the brake lines to the body.
13. Re-attach the sway bar end links to the strut using an 18mm wrench and 8mm socket. Torque nuts to 35 lb-ft.
14. Set the spring perch so that 1.5” of thread is showing under the perch to start.
15. Reinstall the front wheel using a 19mm socket and torque to 150 lb-ft
16. Continue to other side, repeat steps 3-15.

Rear Installation

1. Using proper jacking points, lift and support the rear of the car on jack stands or use a lift.
2. Using a 19mm socket remove the rear wheels.
3. Remove the OE rear shock from the vehicle by unbolting the two large bolts holding the upper aluminum bracket to the inner fender. Also remove the bolts holding the lower shock mount to the control arm.
4. In the next step, you may need to raise the exhausts system to gain access to a necessary bolt. This can be done with the use of a floor jack, or a screw jack.

5. Remove the exhaust hanger bolts and lift the exhaust enough to access the inner lower a-arm bolts.
6. Use an 18mm socket or wrench and a 6mm hex key to loosen and remove the sway bar end links where they attach to lower control arm.
7. Using 18 & 21mm sockets, remove the spindle bolts as shown by red arrows. Support the spindle with a jack, and position the toe link out of the way.

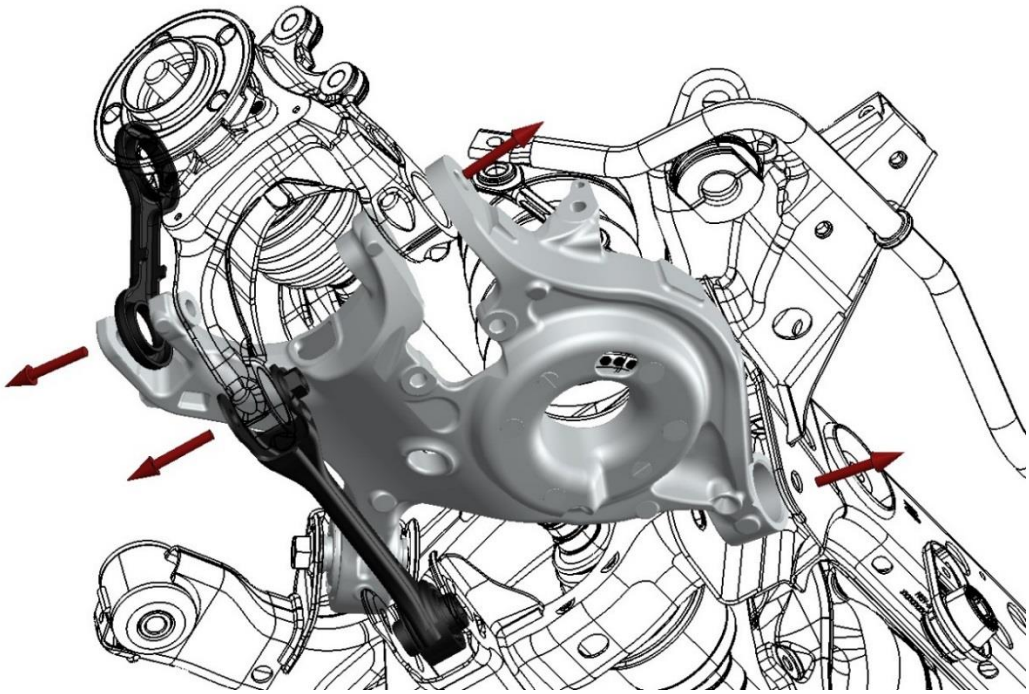

8. Using a 23mm wrench, remove the inner lower a-arm bolt. Make sure you are using a jack to secure the lower a-arm from falling.
9. Use a pry bar to remove the spring from the lower control arm.

10. Use a floor, or screw jack to raise the lower a-arm back into place. Using a 23mm wrench, re-install the inner lower a-arm bolt. Torque to 60 lb-ft.

11. Install the rear coilover to the inner fender area with the supplied M12 x 30 bolts. Torque bolts to 40 lb-ft
12. To set a starting point for ride height, set the spring perch .5” below the orange head.

13. Using 18 & 21mm sockets, reinstall the spindle bolts to the lower control arms. Torque bolts to 40 lb-ft
14. Using a 15mm socket and original hardware, attach the lower shock mount t-bar to the lower control arm. Orient the t-bar to maximize clearance between the spring and the drive axle.
15. Re-attach the sway bar end links to lower a-arm using an 18mm wrench and 6mm allen wrench. Torque nuts to 35 lb-ft.
16. Continue to other side, and repeat steps 4-16.
17. Set all 4 dampers to the recommended settings.
18. Reattach all the exhaust hangers and brackets as removed in Step 3.
19. Double check all your work, and make sure all bolts have been properly torqued and reinstalled.
20. Reinstall the rear wheels using a 19mm socket and torque to 150 lb-ft

Recommended Damping Starting Points

Each shock has 24 clicks of adjustment. Settings are listed in number of clicks down from full stiff. To adjust turn until full stiff and count clicks as you back off.

Street: -10 Front, -10 Rear
Track: -4 Front, -6 Rear

Front Strut

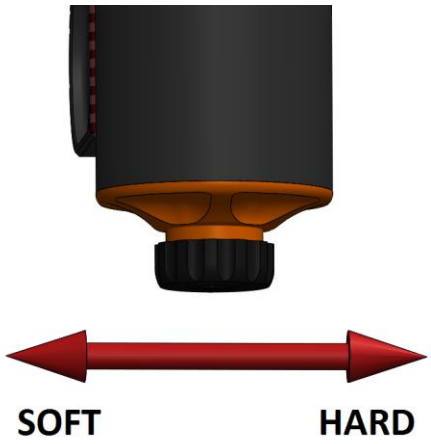

Rear Shock

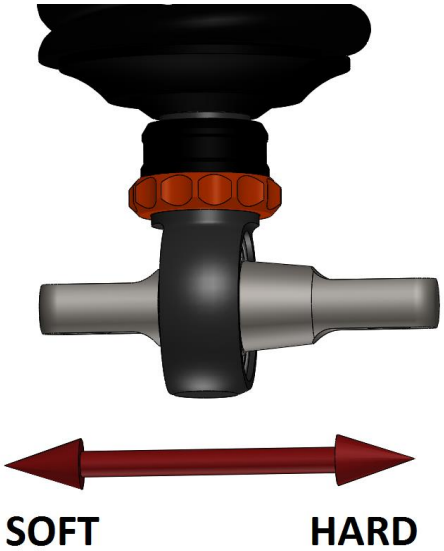

191 Granite Street Ste C
Corona, CA 92879
951-493-7128
www.aFecontrol.com