E4-WM5-Y688A00
MOUNTING INSTRUCTION

This instruction is for both left front (driver) 25-305234/25-305357 and right front (passenger) 25-305241/25-305364 B8 8100 shocks. A bill of materials (BOM) of the included mounting parts kits is shown on the next few pages.

IMPORTANT! READ THIS FIRST!

Installation of shock absorbers requires special tools and expert knowledge. Accordingly, installation of all BILSTEIN products must be performed by a qualified suspension specialist.

When replacing other brands, BILSTEIN shock absorbers should always be installed as a set. All BILSTEIN products must only be used for the specific, intended application as indicated in the application guide. **Any use of any BILSTEIN product other than for its intended use may result in serious bodily injury or death.**

Always use a chassis hoist for the installation of BILSTEIN products and make certain that the raised vehicle is securely attached to the hoist and/or supported to prevent the vehicle from slipping, falling, or moving during the installation process.

If you choose to install any BILSTEIN product without the necessary special tools, expertise or chassis hoist, you may subject yourself to the risk of serious bodily injury or death. If you elect not to use a chassis hoist, at least make sure the vehicle is on level ground, that all tires on the ground during installation are blocked to prevent movement, that at least two tires are on the ground at all times, and that adequately secured safety stands (jack stands) are used to support the chassis. **NEVER** get under the vehicle until you have checked to make sure all of these steps are performed.

BILSTEIN suspension products are gas-filled and are highly pressurized.

- Never place any BILSTEIN product in a vise or use a clamp on any BILSTEIN product.
- Never apply heat near any BILSTEIN product.
- Never attempt to open or repair any BILSTEIN product, in order to prevent **serious bodily injury or death.**

Any attempt to misuse, misapply, modify, or tamper with any BILSTEIN suspension product voids any warranty and **may result in serious bodily injury or death.**

While installing any BILSTEIN product:

- Do not use impact tools for loosening or tightening fasteners, because this may destroy the screw threads.
- Self-locking fasteners must only be used **once**!
- Reuse original equipment components only if they are in good condition, otherwise replace them with new components.
- Never remove the slight film of oil on the piston rod and seal.
- All mounting fasteners for shocks and struts must be securely tightened before operating the vehicle.

After installing any BILSTEIN product:

- The suspension caster and camber must be checked and/or adjusted to comply with the vehicle manufacturer's specifications.
- The (load dependent) brake compensator and the anti-lock brake system must be checked and/or reset to comply with the vehicle manufacturer's specifications.
- The headlight aim must be checked and adjusted.

B8 8100 shocks feature a proprietary BILSTEIN zinc plated finish. This finish must be serviced in order to maintain its luster. Particularly in moist climates, a protective coating, such as a wax or lubricating oil should be periodically applied to prevent tarnishing. This finish is not covered under warranty.

Figure 1: Passenger Side Reservoir Mount Kit

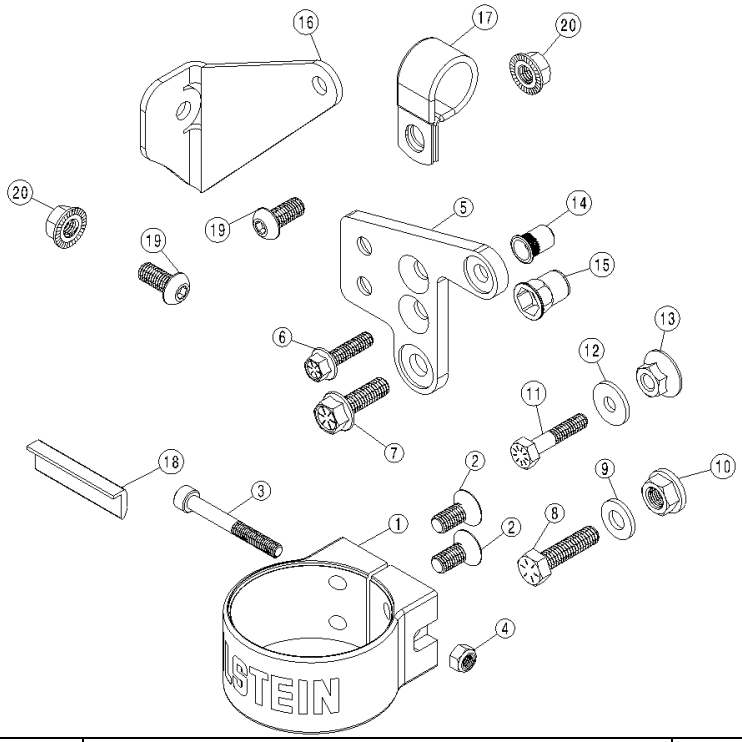

Item	Description	Qty.
1	RESERVOIR CLAMP	1
2	M8 x 1.25 x 18mm COUNTERSUNK SCREW	2
3	M6 x 1 x 50mm SOCKET HEAD CAP SCREW	1
4	M6 x 1 LOCK NUT	1
5	RESERVOIR MOUNT PLATE	1
6	1/4"-20 x 1" HEX SCREW	1
7	5/16”-18 x 1” HEX SCREW	1
8	5/16"-18 x 1.25” HEX SCREW	1
9	5/16" WASHER	1
10	3/8"-24 SERRATED FLANGE NUT	1
11	1/4"-20 x 1.25" CAP SCREW	1
12	1/4" WASHER	1
13	5/16”-18 SERRATED FLANGE NUT	1
14	1/4"-20 THREADED INSERT	1
15	5/16"-18 HEX THREADED INSERT	1
16	MOUNT BRACKET, RESERVOIR HOSE	1
17	LOOP CLAMP	1
18	RUBBER STRIP	1
19	M8 x 1.25 x 18 BUTTON SCREW	2
20	M8 x 1.25 SERRATED FLANGE NUT	2

Figure 2: Driver Side Reservoir Mount Kit

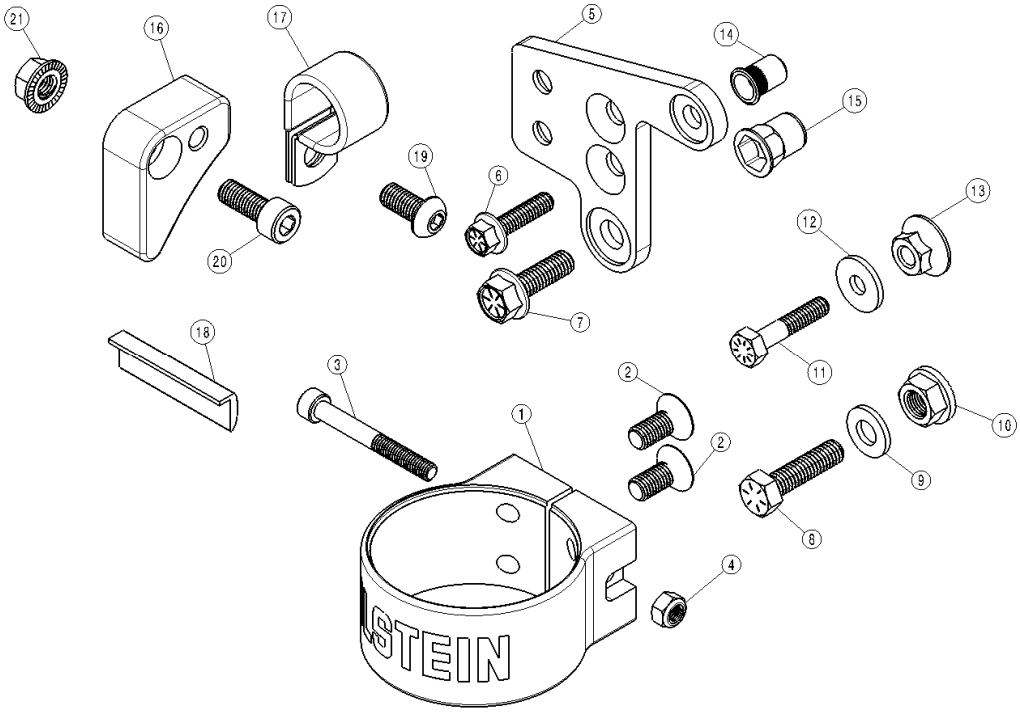

Item	Description	Qty.
1	RESERVOIR CLAMP	1
2	M8 x 1.25 x 18mm COUNTERSUNK SCREW	2
3	M6 x 1 x 50mm SOCKET HEAD CAP SCREW	1
4	M6 x 1 LOCK NUT	1
5	RESERVOIR MOUNT PLATE	1
6	1/4"-20 x 1" HEX SCREW	1
7	5/16”-18 x 1” HEX SCREW	1
8	5/16"-18 x 1.25” HEX SCREW	1
9	5/16" WASHER	1
10	3/8"-24 SERRATED FLANGE NUT	1
11	1/4"-20 x 1.25" CAP SCREW	1
12	1/4" WASHER	1
13	5/16”-18 SERRATED FLANGE NUT	1
14	1/4"-20 THREADED INSERT	1
15	5/16"-18 HEX THREADED INSERT	1
16	MOUNT BRACKET, RESERVOIR HOSE	1
17	LOOP CLAMP	1
18	RUBBER STRIP	1
19	M8 x 1.25 x 18 BUTTON SCREW	1
20	M8 x 1.25 x 20mm SOCKET HEAD CAP SCREW	1
21	M8 x 1.25 SERRATED FLANGE NUT	1

B8 8100 smooth body shock installation procedure:

B8 8100 shocks are corner specific. The step by step procedure is shown with pictures of both sides. See final pages for end result.

Installation of B8 8100 shocks requires the use of wheels with a maximum of 4.5" backspacing to ensure clearance between the tire and the shocks.

A. Remove the existing front shocks from the vehicle following all procedures in the vehicle manufacturer's service manual. Inspect the OE upper bolts/washers for any excessive wear. If damage or excessive wear is present in any of these components, purchase the required replacement OE components.

B. A mount kit is included to allow the remote reservoir to be attached to the vehicle frame rail behind the front bumper. This kit is depicted in Figure 1 (passenger side) and 2 (driver side).

Threaded Insert installation

C. If you have access to a threaded insert gun or pliers, that may be preferable to set the provided threaded insert. Otherwise, start with the ¼"-20 threaded insert by using the items in Figure 3 and a ½" box end wrench. Arrange them as shown and turn the ¼"-20 screw by hand until it is snug as shown in Figure 4.

Note that the screw will pass through the serrated flange nut without engaging the threads. The serrations on the flange nut prevent the threaded insert from rotating while setting it.

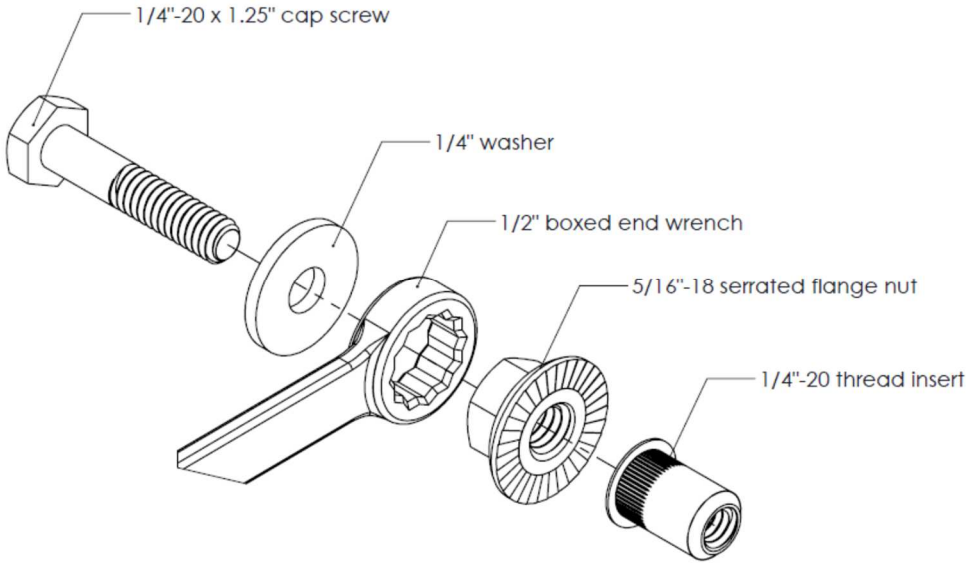

Figure 3

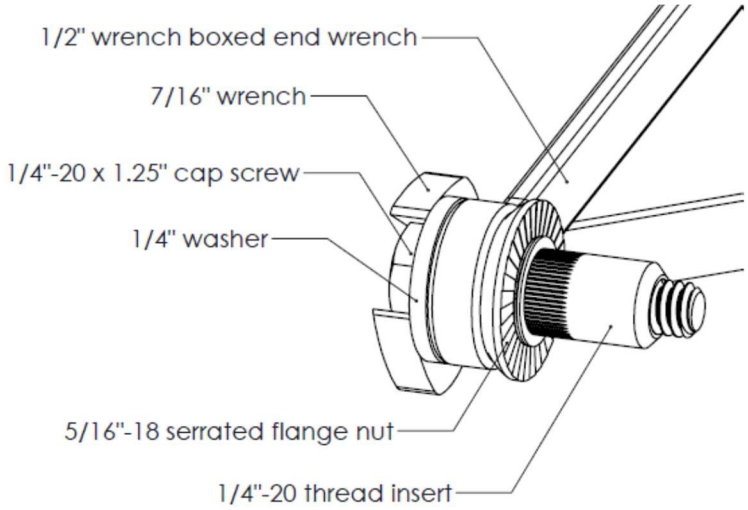

Figure 4

D. For the driver side, place the 1/4"-20 threaded insert into the holes shown in Figure 5. For the passenger side, insert the 1/4"-20 threaded insert into the holes shown in Figure 6.

1/4”-20 THREADED INSERT

5/16”-18 HEX INSERT

Figure 5 – Driver Side

Figure 6 – Passenger Side

E. For the ¼”-20 threaded insert, keep the insert’s flange firm and parallel against the bumper support, and tighten the screw using a 7/16” box end wrench or socket. Turn it 2 rotations to set the threaded insert. Tightening in ¼ turn increments tends to work well.

F. Remove and discard the 1/4"-20 x 1.25" cap screw, 1/4" washer and 5/16”-18 serrated flange nut. The threaded insert should now be rigidly fixed in the hole.

G. Assemble the 5/16”-18 hex screw, 5/16” flat washer, a 9/16” boxed end wrench, the 3/8” serrated flange nut and hex threaded insert the same way as in Figure 3.

H. For the driver side, place the 5/16"-18 hex threaded insert into the holes shown in Figure 5. For the passenger side, insert the 5/16"-18 hex threaded insert into the holes shown in Figure 6.

I. While keeping the threaded insert flange firm and parallel against the bumper support, tighten the 5/16”-18 hex screw using a 1/2” box end wrench or socket. Turn it 2 rotations to set the threaded insert. Tightening in ¼ turn increments tends to work well.

J. Remove and discard the 5/16"-18 x 1.25” hex screw, 5/16” washer and 3/8"-24 serrated flange nut. The threaded insert should now be rigidly fixed in the hole.

Shock Installation

K. Install the driver side shock in the original location with the top mount offsetting outboard away from the vehicle as shown in Figures 7 & 8.

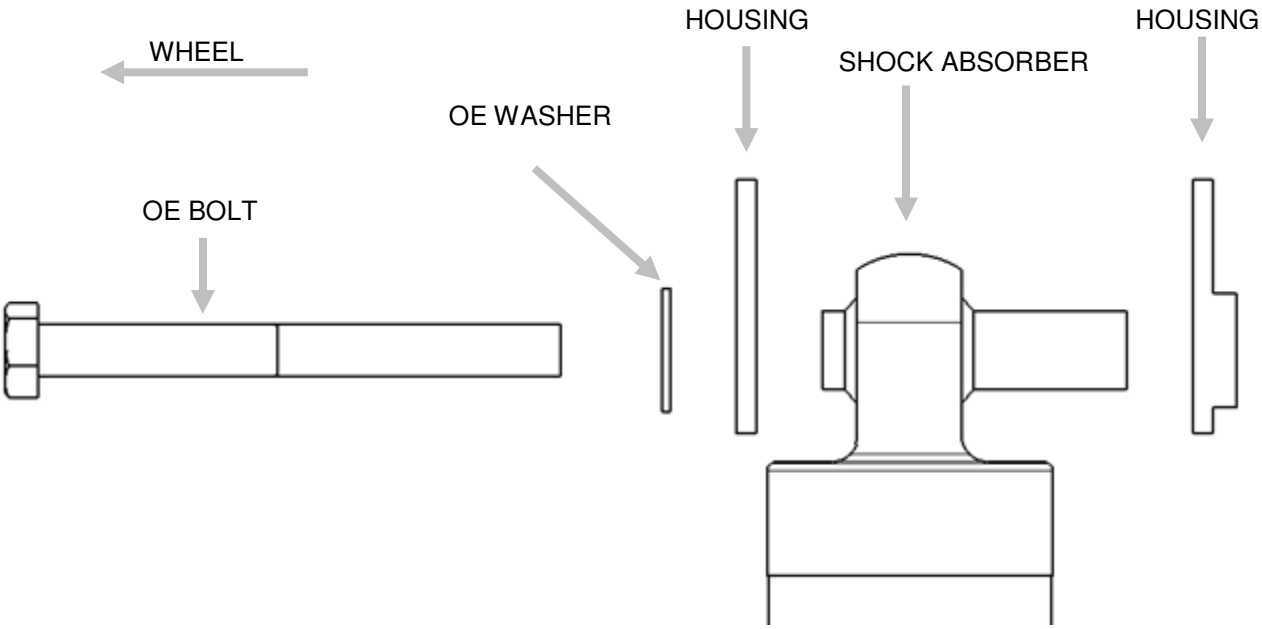

Figure 7 – Driver Side Top Mount

Figure 8 – Driver Side Top Mount

L. Install the passenger side shock in the original location with the top mount offsetting outboard away from the vehicle as shown in Figures 9 & 10.

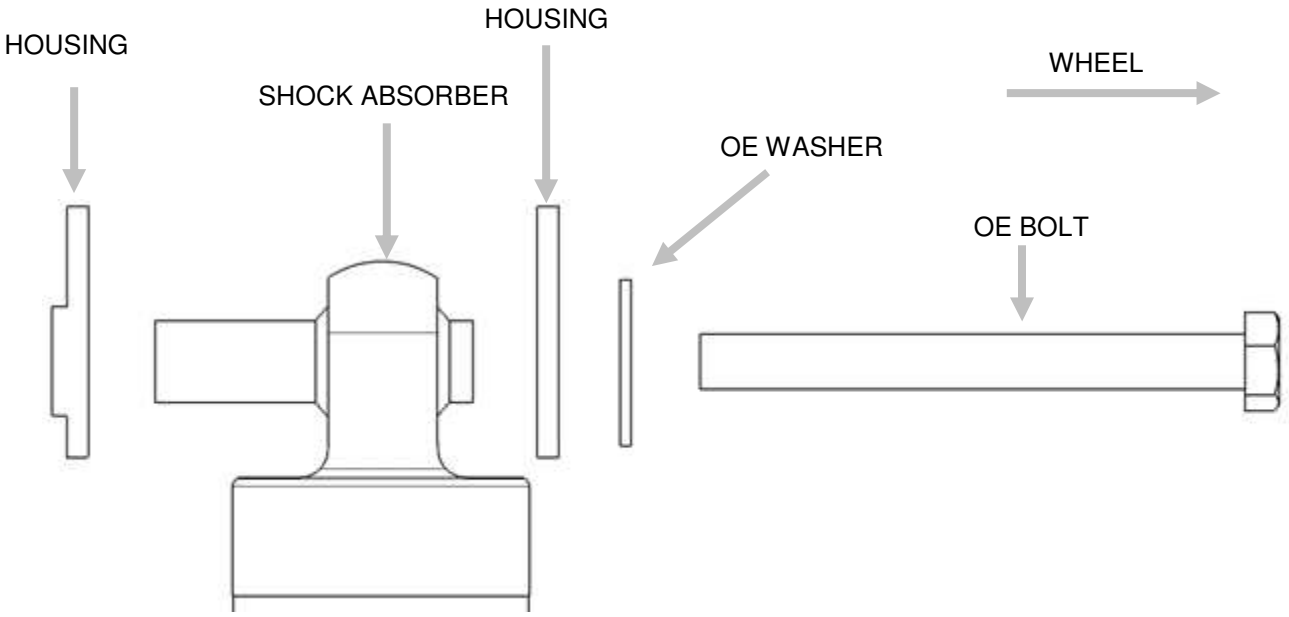

Figure 9 – Passenger Side Top Mount

Figure 10 – Passenger Side Top Mount

M. A mount kit is included to allow the lower shock mount to be offset away from the frame. This kit is depicted in Figure 11.

Item	Description	Qty.
1	clevis	1
2	Spacer, 12.8 ID, L = 40	1
3	Screw, M8x1.25, L = 25	1
4	Screw, M10x1.5, L = 25	1
5	Nut M8 x 1.25	1
6	Nut M10 x 1.5	1
7	Nut M12 x 1.75	1
8	M12x1.75, L=120, Class 12.9	1

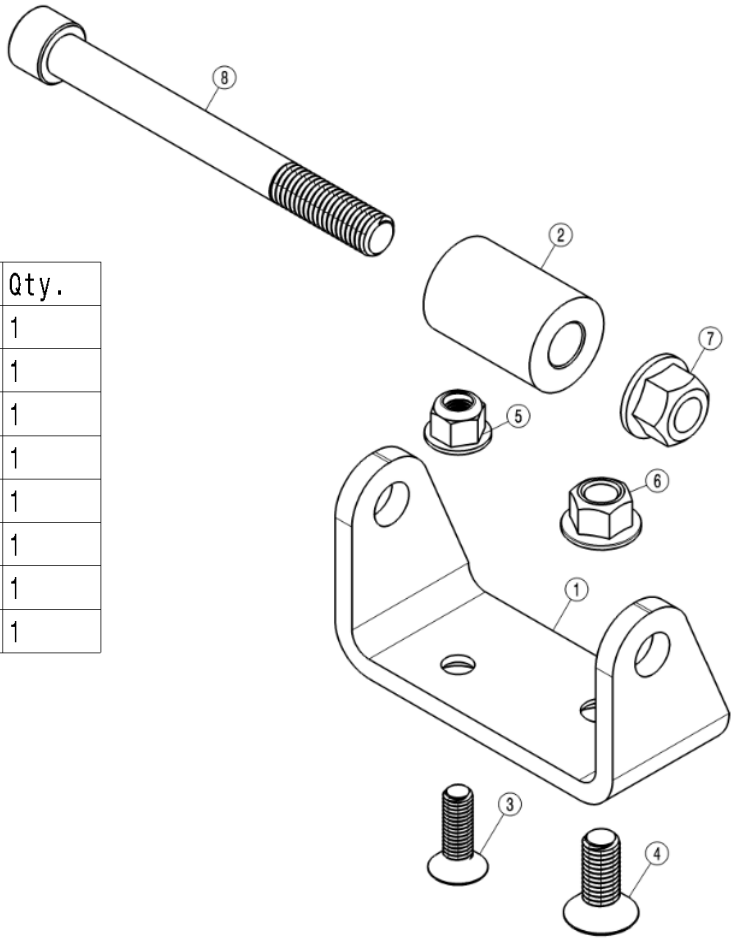

Figure 11 – Lower Mount Offset Bracket

N. Install the clevis from the mount kit in Figure 11 as shown in Figures 12 & 13. The position of the clevis should allow the shock lower mount to be offset outboard towards the wheel. Use the M8 screws and nuts for both driver and passenger sides, and torque fasteners to 19 lb•ft (25 N•m).

Note: This lower mount kit is for both the JL Wrangler and JT Gladiator. The M10 bolt and nut can be discarded for the Gladiator's application.

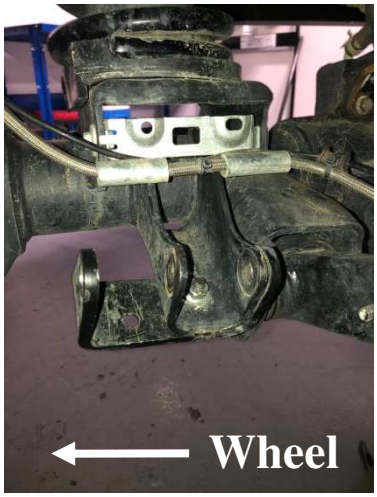

Figure 12 – Driver Side Offset Bracket

Figure 13 – Passenger Side Offset Bracket

O. Place the spacer in between the flanges of the OE mount. Then position the shock's lower mount outside of the OE's mount as shown in Figures 14 & 15 with the rod positioned rearward and inboard of the lower eyelets center. Secure it with the M12 bolt and nut.

Figure 14 – Driver Side Bottom Mount

Figure 15 – Passenger Side Bottom Mount

P. Torque the top and bottom mounting fasteners to factory specification.

Reservoir Mounting

A. Apply rubber strip on the flanges of the chassis body mount for both driver and passenger side. Place it on the flange towards the rear as shown in Figure 16 and 17. This will help project the reservoir hose from being damaged.

Figure 16 –Driver Side

Figure 17 – Passenger Side

B. Prepare the reservoir mount assembly by applying non-permanent thread locker to the M8x1.25 countersunk screws. Assemble the reservoir bracket onto the mounting plate using the M8x1.25 countersunk screws as shown in Figure 18. Tighten the M8x1.25 countersunk screws using a 5mm hex. Torque the M8x1.25 countersunk screws to 16 lb•ft (22 N•m).

C. Place the M6x1 Nylocks in the slots of the Reservoir Clamps as shown in Figure 18. Then insert the M6x1x50 Socket Head Cap Screws into the holes in the Reservoir Clamps, threading them into the M6x1 Nylocks as shown in Figure 18. Using a 5mm Hex, tighten the M6x1x50 Socket Head Cap Screws only a few turns, leaving them loose enough so the reservoirs can be installed at the next step of these instructions.

Figure 18

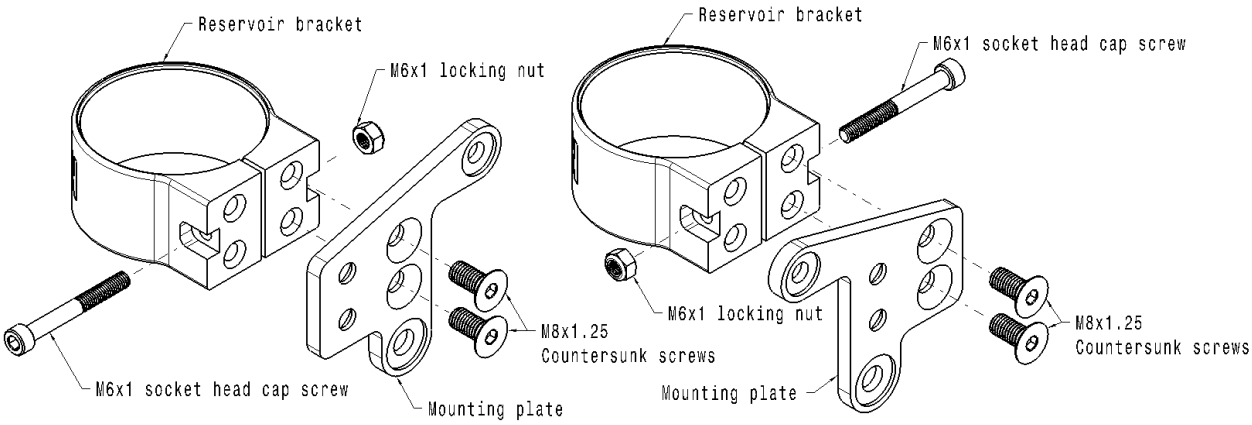

Driver side **Passenger side**

D. Apply non-permanent thread locker to the 5/16”-18 x 1” Flange Head Cap Screws and install the reservoir mount assemblies with the screws at the bottom threaded inserts. Leave the screws loose for now. Rotate the assemblies toward the rear of the vehicle and slide the reservoirs into the clamps as shown in Figures 19 and 21.

E. Rotate the reservoir mount assemblies back to vertical. Apply non-permanent thread locker to the 1/4”-20 x 1” Flange Head Cap Screws and install them in the upper threaded inserts as shown in Figures 20 & 22.

Figure 19 – Driver Side

Figure 20 – Driver Side

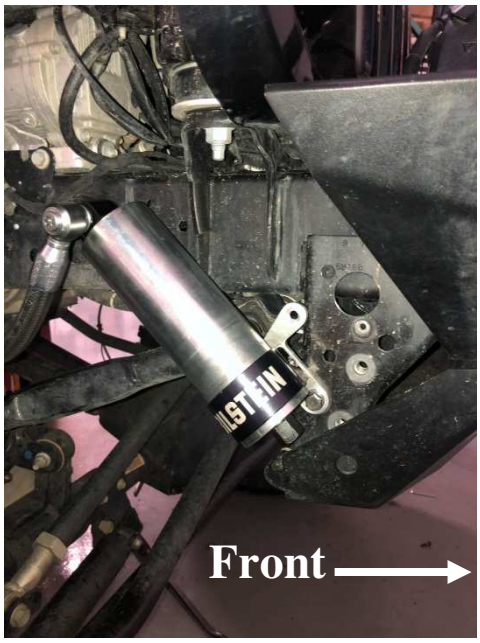

Figure 21 – Passenger Side

Figure 22 – Passenger Side

F. Torque the two (1/4"-20 x 1" and 5/16”-18 x 1”) hex screws to 10 lb•ft (13.6 N•m).

G. Position the end of both reservoir tubes approximately 40mm below the bottom side of the clamp as shown in Figure 23.

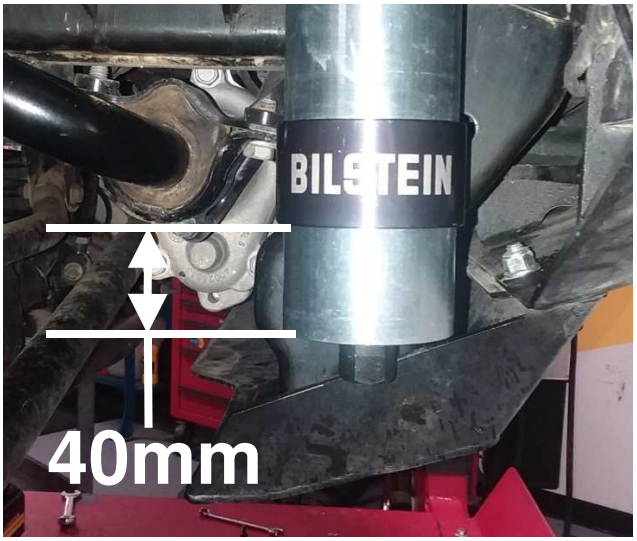

Figure 23 – Reservoir Height

H. Angle the reservoir hose toward the inside of the vehicle. Adjust the reservoir angle so that the reservoir hose is 6mm from the chassis body mount as shown in Figures 24 and 25. Make sure to maintain the 40mm distance between the end of the reservoir tube, and the bottom side of the clamp as shown in Figure 23. Torque the M6x1 Socket Head Cap Screw in the Reservoir Clamp to 6 lb•ft (8 N•m).

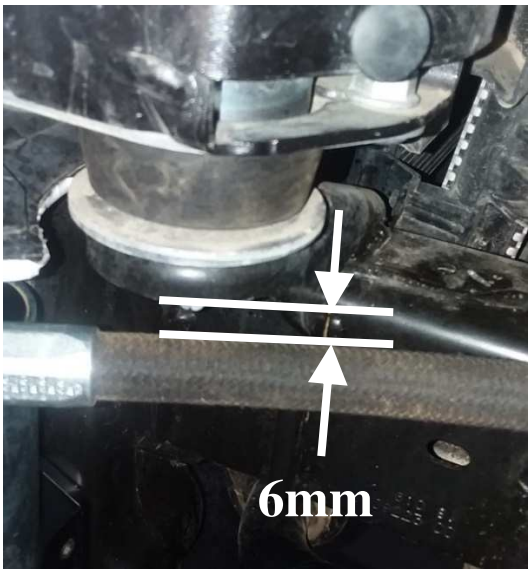

Figure 24 – Driver Side

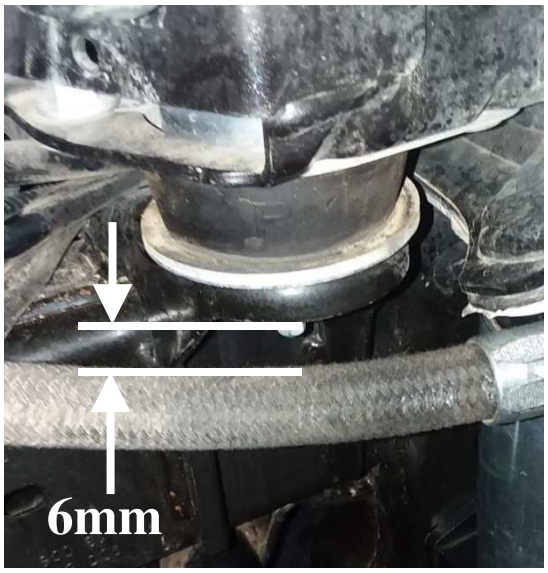

Figure 25 – Passenger Side

Reservoir Hose Mounting

A. For driver side locate the hole in the front side of the left spring bucket. Using an M8x1.25 Socket Head Cap Screw, and an M8x1.25 Serrated Flange Nut, attach the Left Reservoir Hose Mount Bracket to the spring bucket and orient as shown in Figure 26. Then put the hose clamp around the reservoir hose and mount it on the bracket with the M8 x 1.25 x 18 button screw as shown in Figure 27. Torque the screws to 16 ft-lb (22 Nm).

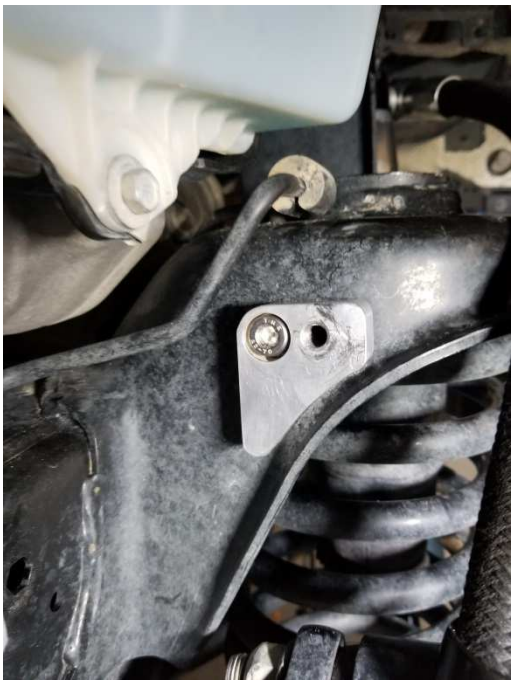

Figure 26 – Driver Side

Figure 27 – Driver Side

B. Route the hose as shown in Figures 27 & 28. The section of hose closest to the shock body should follow the outside perimeter of the spring tower. The other half of the hose at the reservoir should be routed close to the frame.

Figure 28 – Driver Side

C. For the passenger side, locate the hole in the front side of the spring bucket. Using a M8x1.25 Button Screw, and a M8x1.25 Serrated Flange Nut, attach the Right Reservoir Hose Mount Bracket to the spring bucket and orient as shown in Figure 29. Then put the hose clamp around the reservoir hose and mount it on the bracket with the M8x1.25x18 button screw and M8x1.25 serrated flange nut as shown in Figure 30. Torque the screws to 16 ft-lb (22Nm).

Figure 29 – Passenger Side

Figure 30 – Passenger Side

D. Route the hose as shown in Figures 30 & 31. The section of hose closest to the shock body should follow the outside perimeter of the spring tower. The other half of the hose at the reservoir should be routed close to the frame.

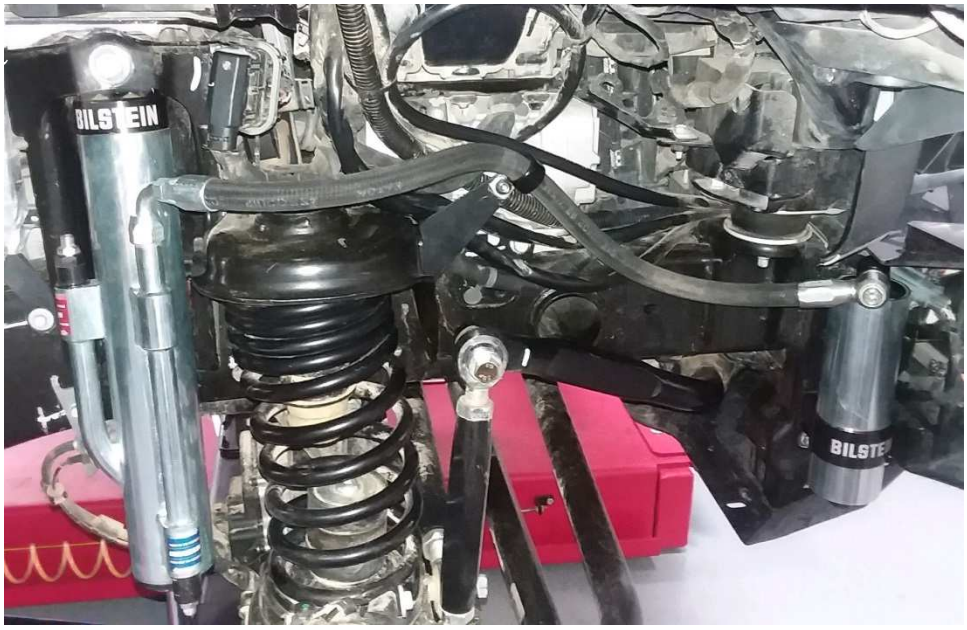

Figure 31 – Passenger Side

E. If the inner fender liners had been removed, reinstall them behind the reservoir hose.

F. Carefully check for any possible interference between the reservoirs/hoses and any other components on the vehicle. The reservoir mounting location depicted is appropriate for most vehicles for which this kit is intended, however, some wheel/tire and/or lift kit combinations and/or other vehicle modifications may create interference problems. It is the responsibility of the installer to determine if the reservoirs are mounted appropriately and if there is any potential for interference.

Q. Check for interferences and wheel alignment. If there are no interferences and wheels are aligned to vehicle manufacturer's specification, installation is complete.

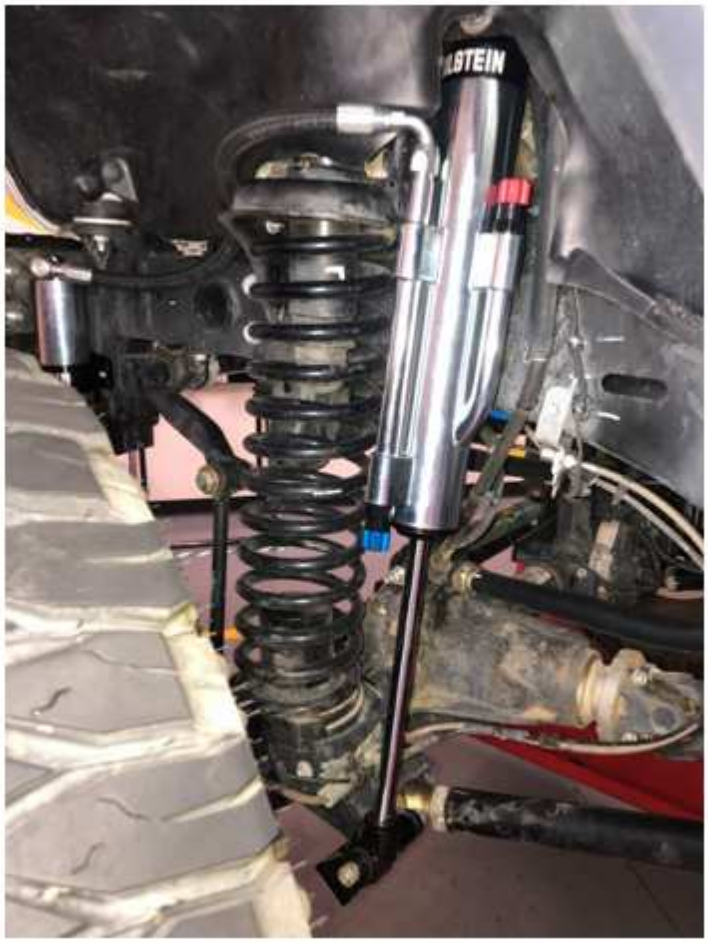

Left Side Installed

Right Side Installed

B8 8100 bypass shocks allow the user to tune the damping for the best possible ride quality of their vehicle. The shocks offer multiple zones of compression and rebound damping, depending upon the bypass configuration. The factory setting is:

Rebound – 7 full turns out from fully closed
Compression – 7 full turns out from fully closed
**note*: 4 clicks equals 1 full turn

Also Note: The bypass adjusters allow adjustment up to 10 full turns out from fully closed.

B8 8100 bypass adjustment procedure:

Rotate the blue and red adjuster knobs to make the desired adjustment.

TURN IN (Clockwise) the adjuster knob to **INCREASE** damping

TURN OUT (Counter Clockwise) the adjuster knob to **DECREASE** damping

B8 8100 bypass service:

For service of your B8 8100 bypass shocks, please contact:

THYSSENKRUPP BILSTEIN OF AMERICA
14102 Stowe Dr.
Poway, CA 92064, USA

Toll Free: 1-800-537-1085
bilsteinus.com